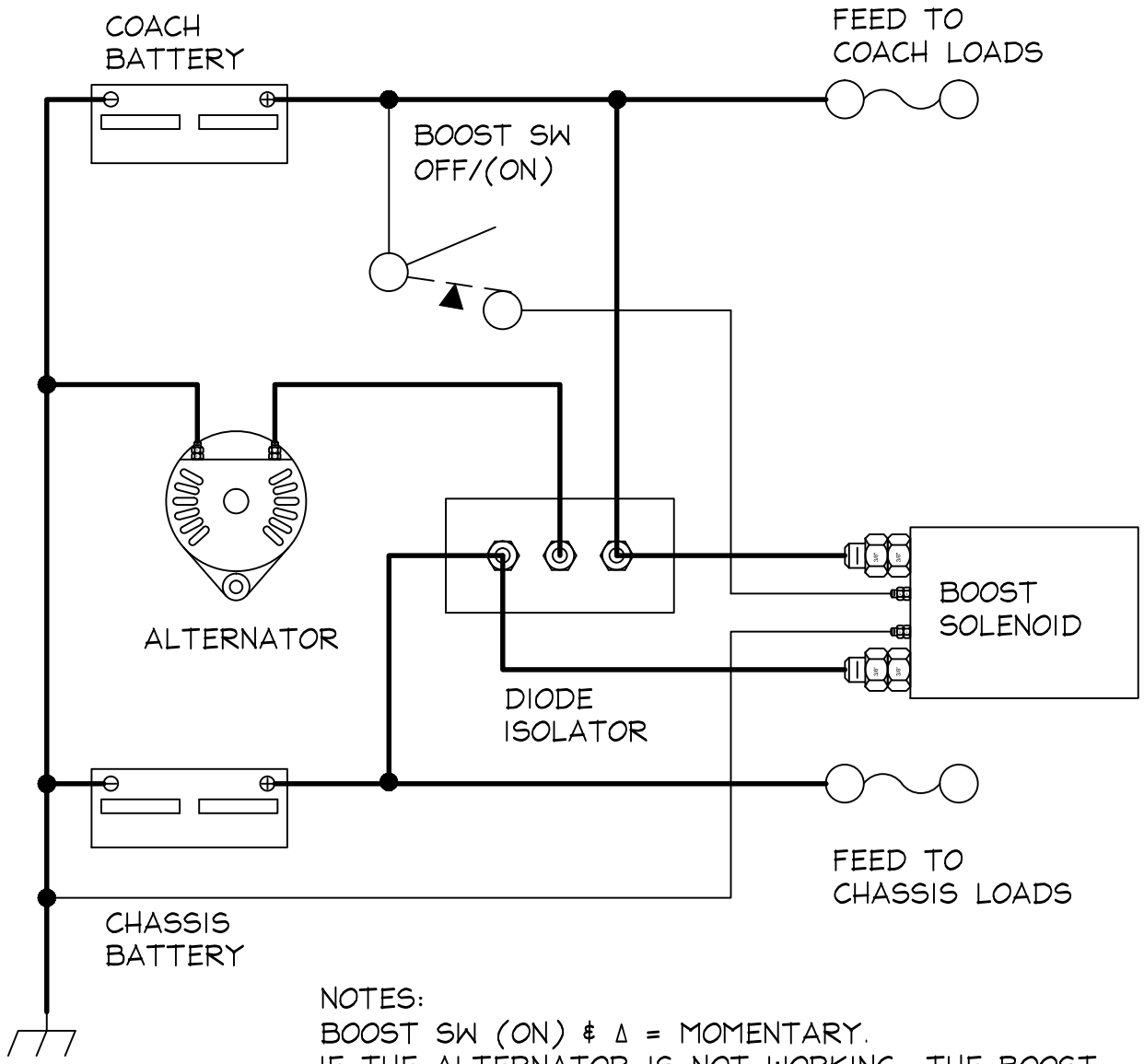

NOTES:
BOOST SW (ON) ¢ Δ = MOMENTARY.
IF THE ALTERNATOR IS NOT WORKING, THE BOOST SW CAN BE WEDGED ON TO USE THE GENERATOR TO CHARGE BOTH BATERIES WHILE DRIVING.

SCALE: N/A	PROJECT: SAFARI BATTERY CHARGE		TITLE: SMC ALTERNATOR CHARGE
DRAWN: JIM EXLER	LOC: NAMPA, ID		DRG: ALTCHG1
DATE: 1/24/17	JOB NO: N/A	Alternator Chg.dwg	REVISION 0

03/06/17 6:42:44 PM D:\MY DOCUMENTS_RV\ELECT\ALTERNATOR CHG.DWG